# VDL Reduktionsmuff PVC-U 315 mm x 250 mm limsockel 6bar grå type extruderad (7002478)



Van de Lande

bevo
bringing water to life

# TEKNISKA SPECIFIKATIONER

| | |
|---|---|
| Färg | grå |
| Typ | extruderad |
| Material | PVC-U |
| Storlek | 315 mm x 250 mm |
| Anslutning | limsockel |
| WebshopURL | https://www.bevo.com/sv-se/vdl-reduktionsmuff-pvc-u-315-mm-x-250-mm-limsockel-6bar-graa-type-extruderad-7002478 |
| Tryck | 6 bar |

# DIMENSIONER

| | |
|---|---|
| Form | handformad |
| L | 509 mm |
| P-1 | 172 mm |
| P-2 | 137 mm |
| ØDi-1 | 315 mm |
| ØDi-2 | 250 mm |

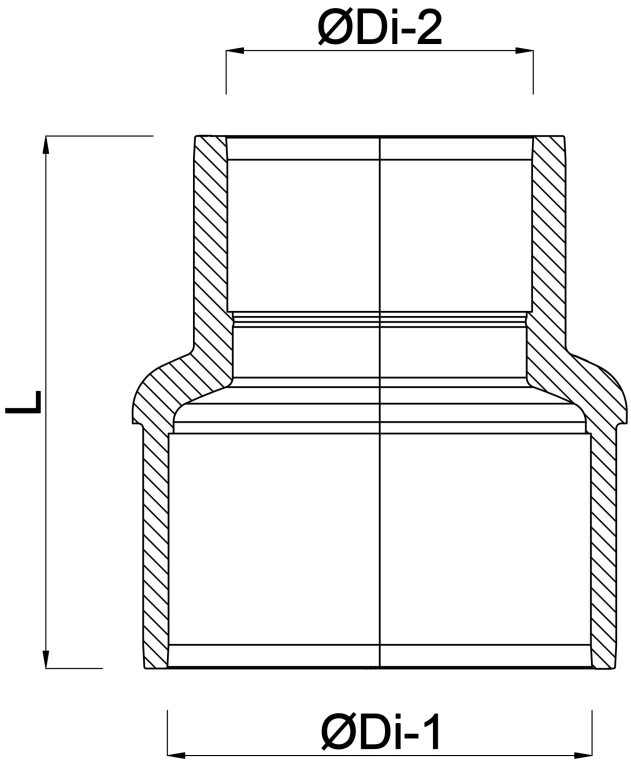


# Genererad den: 01/11/2026

Bevo Nordic A/S
Pakhusgården 54
5000 Odense C
Danmark
+45 66 19 25 45
info@bevo.dk
http://www.bevo.com

bevo
bringing water to life