# VDL Reduktionsmuff PVC-U 200 mm x 140 mm limsockel 6bar grå type extruderad (7002473)



Van de Lande

bevo
bringing water to life

# TEKNISKA SPECIFIKATIONER

| | |
|---|---|
| Färg | grå |
| Typ | extruderad |
| Material | PVC-U |
| Storlek | 200 mm x 140 mm |
| Anslutning | limsockel |
| WebshopURL | https://www.bevo.com/sv-se/vdl-reduktionsmuff-pvc-u-200-mm-x-140-mm-limsockel-6bar-graa-type-extruderad-7002473 |
| Tryck | 6 bar |

# DIMENSIONER

| | |
|---|---|
| Form | handformad |
| L | 306 mm |
| P-1 | 111 mm |
| P-2 | 80 mm |
| ØDi-1 | 200 mm |
| ØDi-2 | 140 mm |

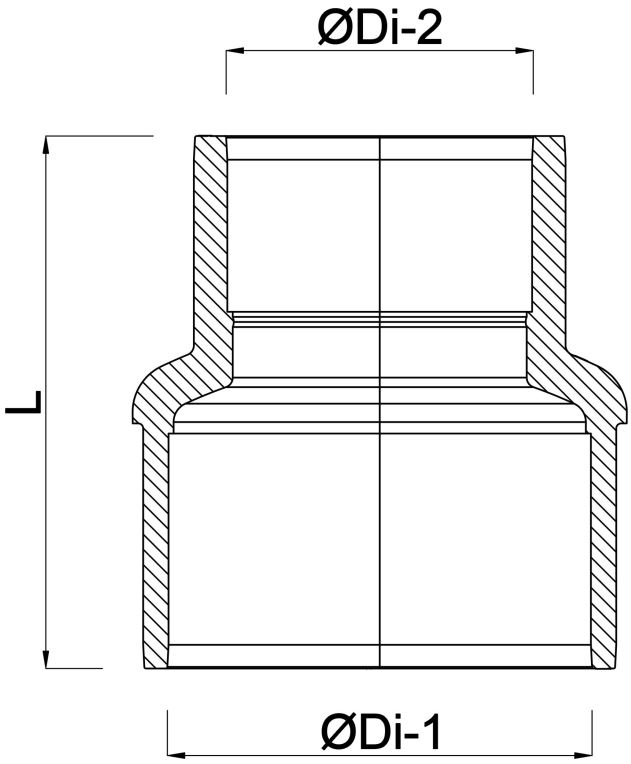


# Genererad den: 01/11/2026

Bevo Nordic A/S
Pakhusgården 54
5000 Odense C
Danmark
+45 66 19 25 45
info@bevo.dk
http://www.bevo.com

bevo
bringing water to life